Round 4 - Sunday, May 16, 2021

SHOTLINK

AT&T Byron Nelson

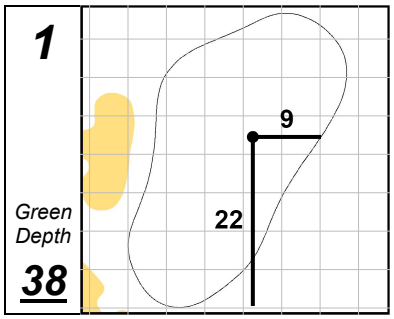

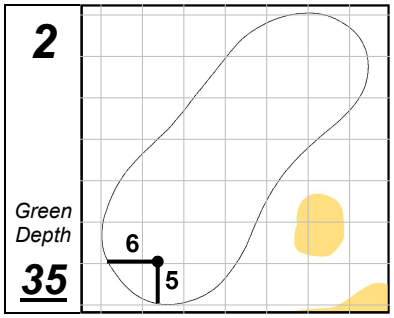

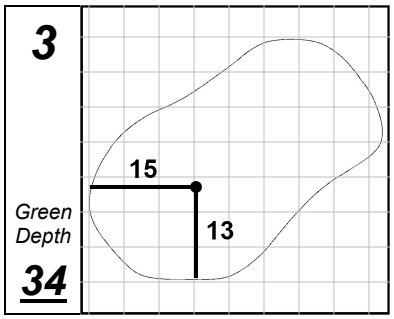

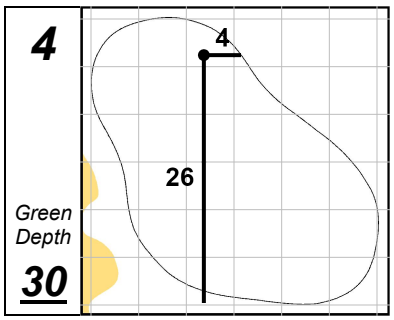

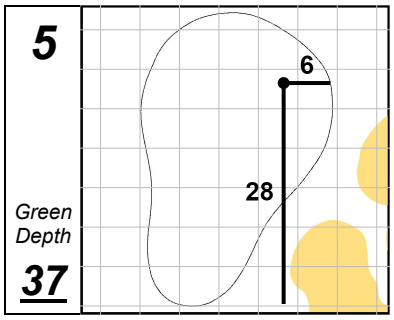

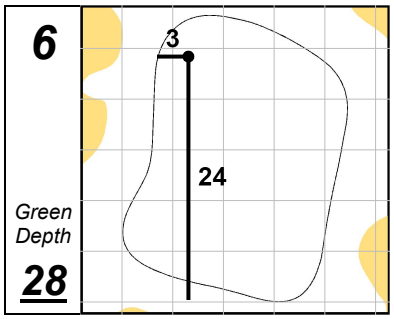

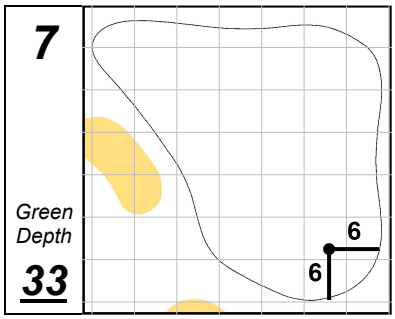

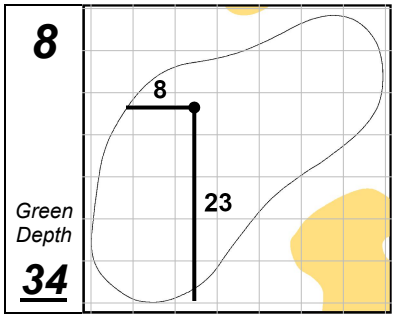

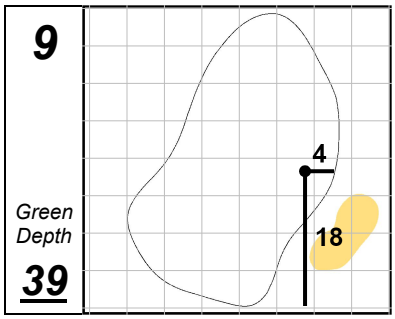

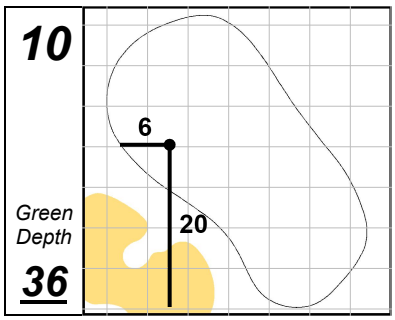

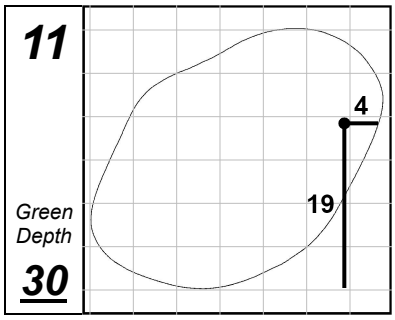

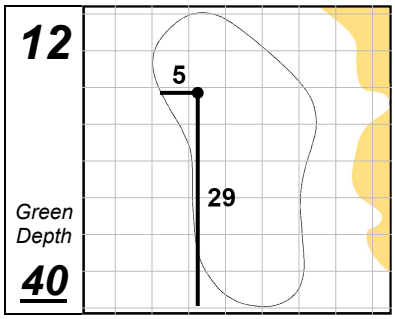
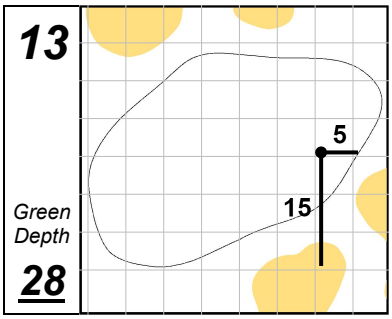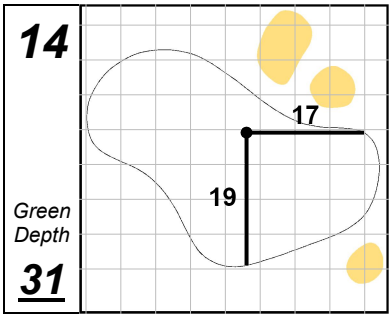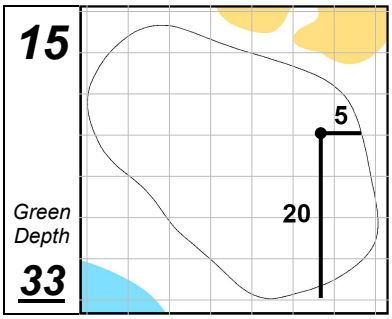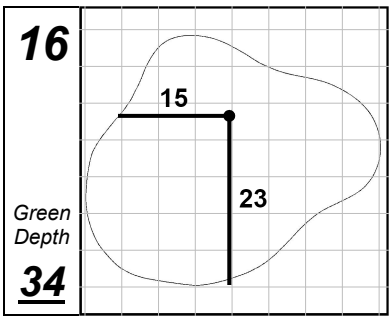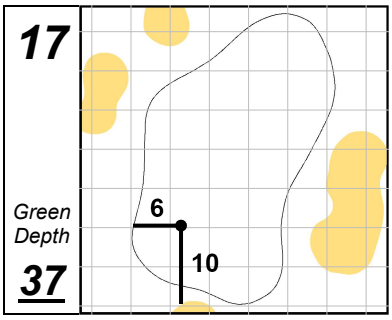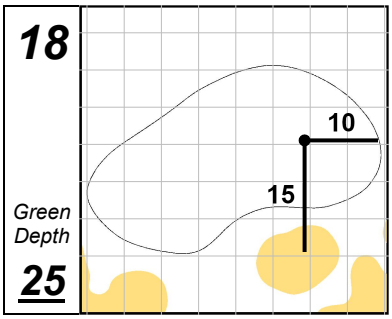
TPC Craig Ranch